Cambridge Assessment International Education

Cambridge International AS & A Level

PHYSICS **9702/13**

Paper 1 Multiple Choice **May/June 2025**

1 hour 15 minutes

You must answer on the multiple choice answer sheet.

You will need: Multiple choice answer sheet
Soft clean eraser
Soft pencil (type B or HB is recommended)

INSTRUCTIONS

- There are **forty** questions on this paper. Answer **all** questions.
- For each question there are four possible answers **A**, **B**, **C** and **D**. Choose the **one** you consider correct and record your choice in soft pencil on the multiple choice answer sheet.
- Follow the instructions on the multiple choice answer sheet.
- Write in soft pencil.
- Write your name, centre number and candidate number on the multiple choice answer sheet in the spaces provided unless this has been done for you.
- Do **not** use correction fluid.
- Do **not** write on any bar codes.
- You may use a calculator.

INFORMATION

- The total mark for this paper is 40.
- Each correct answer will score one mark.
- Any rough working should be done on this question paper.

This document has **20** pages. Any blank pages are indicated.

© UCLES 2025

Data

acceleration of free fall	$g = 9.81\,\text{m s}^{-2}$
speed of light in free space	$c = 3.00 \times 10^{8}\,\text{m s}^{-1}$
elementary charge	$e = 1.60 \times 10^{-19}\,\text{C}$
unified atomic mass unit	$1\,\text{u} = 1.66 \times 10^{-27}\,\text{kg}$
rest mass of proton	$m_\text{p} = 1.67 \times 10^{-27}\,\text{kg}$
rest mass of electron	$m_\text{e} = 9.11 \times 10^{-31}\,\text{kg}$
Avogadro constant	$N_\text{A} = 6.02 \times 10^{23}\,\text{mol}^{-1}$
molar gas constant	$R = 8.31\,\text{J K}^{-1}\,\text{mol}^{-1}$
Boltzmann constant	$k = 1.38 \times 10^{-23}\,\text{J K}^{-1}$
gravitational constant	$G = 6.67 \times 10^{-11}\,\text{N m}^2\,\text{kg}^{-2}$
permittivity of free space	$\varepsilon_0 = 8.85 \times 10^{-12}\,\text{F m}^{-1}$ $\left(\frac{1}{4\pi\varepsilon_0} = 8.99 \times 10^{9}\,\text{m F}^{-1}\right)$
Planck constant	$h = 6.63 \times 10^{-34}\,\text{J s}$
Stefan–Boltzmann constant	$\sigma = 5.67 \times 10^{-8}\,\text{W m}^{-2}\,\text{K}^{-4}$

Formulae

uniformly accelerated motion	$s = ut + \frac{1}{2}at^2$ $v^2 = u^2 + 2as$
hydrostatic pressure	$\Delta p = \rho g \Delta h$
upthrust	$F = \rho g V$
Doppler effect for sound waves	$f_\text{o} = \frac{f_\text{s} v}{v \pm v_\text{s}}$
electric current	$I = Anvq$
resistors in series	$R = R_1 + R_2 + \ldots$
resistors in parallel	$\frac{1}{R} = \frac{1}{R_1} + \frac{1}{R_2} + \ldots$

© UCLES 2025

1 What represents a vector quantity?

A 1 N upwards

B 2 kg decrease

C 3 K cooler

D 4 s later

2 What is a reasonable estimate of the current in an electric kettle that is in use?

A 8 μA **B** 8 mA **C** 8 A **D** 8 kA

3 Which statement about errors in measurements is correct?

A An accurate set of measurements always has a small random error.

B A precise set of measurements always has a small systematic error.

C A random error can be reduced by taking an average of several measurements.

D A systematic error creates a random set of measurements spread out about the true value.

4 A sample of material has cross-sectional area A and length L. The temperatures at the two sides of the sample are T_1 and T_2. Thermal energy Q is transferred through the sample in time t.

These quantities are related by

$$\frac{Q}{t} = \frac{k \times A \times (T_1 - T_2)}{L}$$

where k is a constant.

What are the SI base units of k?

A $\text{kg m s}^{-3} \text{°C}^{-1}$ **B** $\text{kg m s}^{-3} \text{K}^{-1}$ **C** $\text{kg m s}^{-1} \text{°C}^{-1}$ **D** $\text{kg m s}^{-1} \text{K}^{-1}$

5 The graph shows the variation of velocity with time t of an object moving in a straight line.

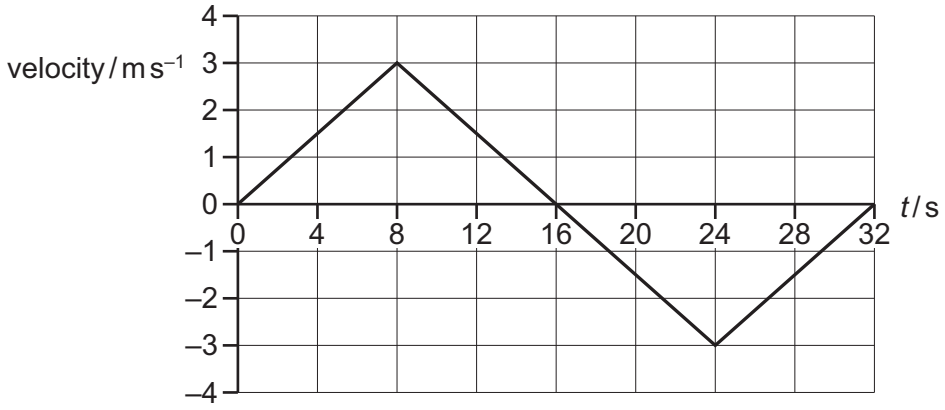

At $t = 0$, the displacement of the object is zero.

What is the displacement of the object at $t = 20$ s?

A –3 m **B** 21 m **C** 24 m **D** 27 m

6 A science museum designs an experiment to show the fall of a feather in a vertical glass vacuum tube.

The time of fall from rest in the vacuum is to be close to 0.5 s.

Which length of tube is required?

A 1.2 m **B** 2.5 m **C** 4.9 m **D** 9.8 m

© UCLES 2025

7 Two coins are projected from a horizontal table at the same initial speed u.

Coin X is projected horizontally.

Coin Y is projected upwards at an angle of 30° to the horizontal.

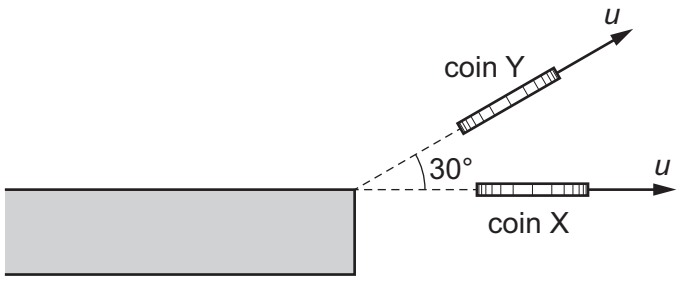

Both coins hit the horizontal ground without bouncing.

Assume the air resistance on each coin is negligible.

Which statement about the motion of the coins is correct?

A Both coins hit the ground with the same speed.

B Both coins travel the same vertical distance.

C Coin Y hits the ground before coin X.

D Coin Y has a smaller vertical acceleration.

8 Two spheres are released from rest at equal heights above the ground.

Both spheres reach terminal velocity.

One sphere has a larger density than the other sphere.

Both spheres have equal volumes.

Which statement is correct while both spheres are at terminal velocity?

A The drag forces on the spheres are equal.

B The resultant forces on the spheres are equal.

C The velocities of the spheres are equal.

D The weights of the spheres are equal.

© UCLES 2025

9 Which statement **defines** force?

A When a force acts on a body that is free to move, the force is the product of the mass of the body and its acceleration.

B When a force acts on a body that is free to move, the force is the rate of change of momentum of the body.

C When a force acts on a body that is free to move, the force is the work done by the force divided by the distance moved by the body.

D When a force acts on a lever and causes a moment, the force is the moment divided by the perpendicular distance of the force from the pivot.

10 Four forces, all in the same plane, act on an object.

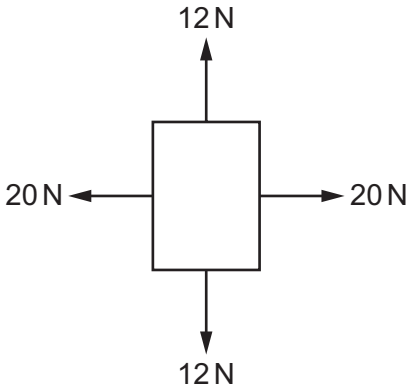

What could describe the motion of the object?

A It is accelerating.

B It is moving in a straight line.

C It is moving with decreasing speed.

D It is moving with increasing momentum.

© UCLES 2025

11 A nucleus collides with a stationary nucleus in a vacuum. The diagrams show the paths of the nuclei before and after the collision.

No other particles are involved in the collision.

Which diagram is **not** possible?

A

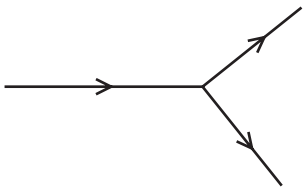

B

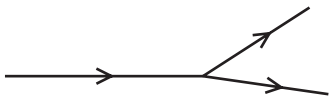

C



D

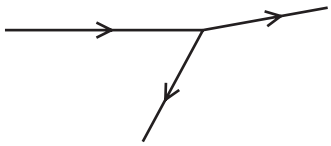

12 A non-uniform bar PQ has length 50 cm and weight 200 N.

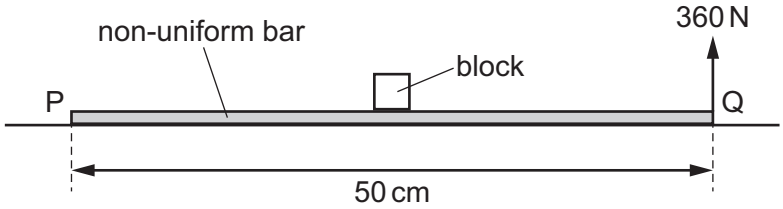

A block of weight 400 N is attached to the top of the bar at its centre. The bar rests on horizontal ground.

A vertical force of 360 N is now exerted upwards on the bar at end Q and is just sufficient to lift end Q from the ground.

What is the distance from the centre of gravity of the bar to end P?

A 0.050 m **B** 0.10 m **C** 0.25 m **D** 0.40 m

13 What is the definition of density?

A mass of one cubic metre

B mass of a unit volume

C mass per cubic metre

D mass per unit volume

© UCLES 2025

14 A block is in equilibrium on a slope.

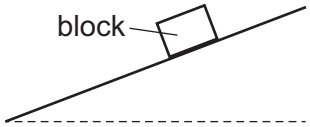

Which vector triangle represents the three forces acting on the block?

A



B



C



D



15 A measuring cylinder contains 80 cm^3 of a liquid.

The pressure due to the liquid at the 60 cm^3 mark is 1200 Pa.

What is the pressure due to the liquid at the base of the measuring cylinder?

A 1200 Pa **B** 1600 Pa **C** 3600 Pa **D** 4800 Pa

16 Four identical uniform blocks are spread on a table. Each block has mass *m* and thickness *h*.

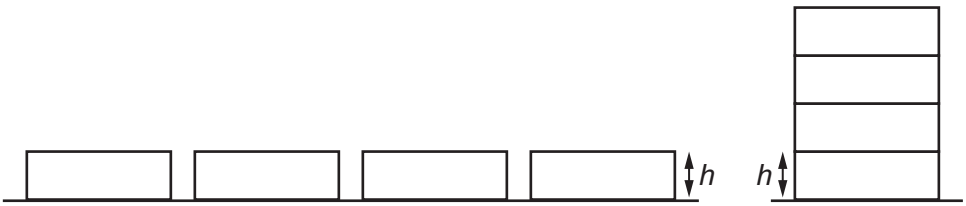

The acceleration of free fall is *g*.

How much work is done on the blocks in stacking them on top of one another?

A 3*mgh* **B** 6*mgh* **C** 8*mgh* **D** 10*mgh*

17 An electric motor uses 1.7 kW of power when operating normally.

The efficiency of the motor is 53%.

What is the useful output power of the motor?

A 0.032 kW **B** 0.90 kW **C** 3.2 kW **D** 90 kW

© UCLES 2025

18 A ball is released from rest and falls vertically to the ground.

The kinetic energy E_K of the ball varies as the height h of the ball above the ground changes.

Air resistance is negligible.

Which graph shows the variation of E_K with h?

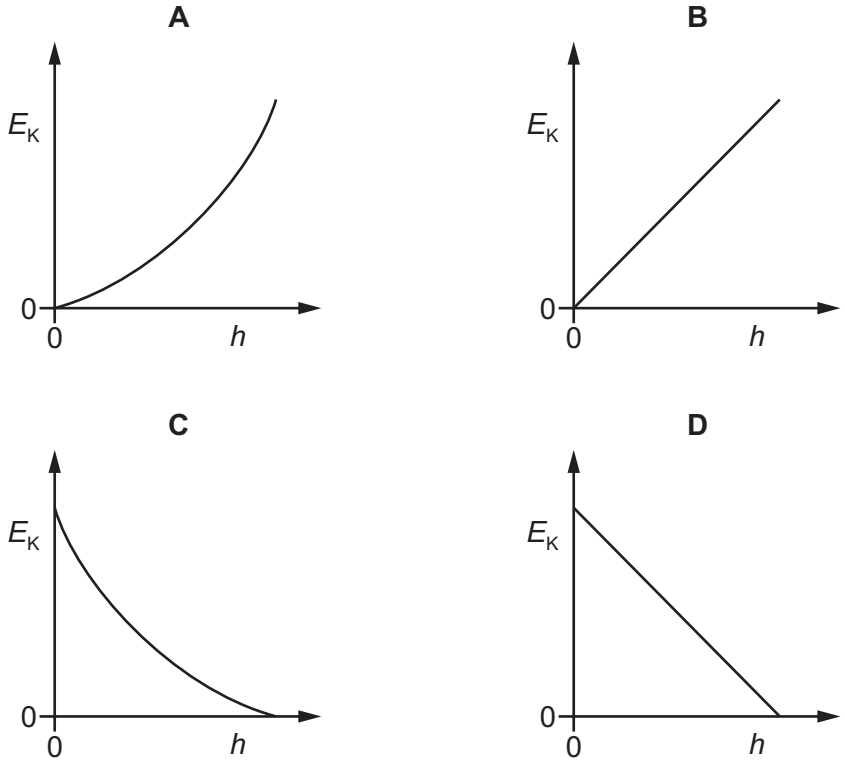

19 An object travelling with a speed of $10\,m\,s^{-1}$ has kinetic energy of 1500 J.

The speed of the object is increased to $40\,m\,s^{-1}$.

What is the new kinetic energy of the object?

A 4500 J **B** 6000 J **C** 24 000 J **D** 1 350 000 J

20 What are the units of stress, strain and the Young modulus?

	stress	strain	Young modulus
A	newton	metre	pascal
B	newton	no unit	newton
C	pascal	metre	newton
D	pascal	no unit	pascal

© UCLES 2025

21 The force–extension graph for a metal wire is shown.

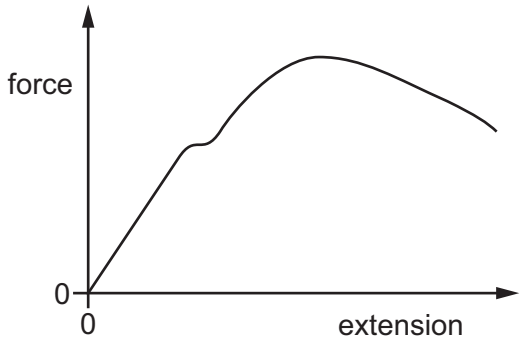

Which quantity is represented by the area under the graph?

A power transferred to the wire

B temperature increase in the wire

C time taken for the wire to extend

D work done on the wire

22 A wire of length L_0 is attached at one end to a fixed point. A tensile force is applied to the other end so that the wire extends and has a new length L_1.

What is the strain of the wire?

A $\left(\frac{L_1}{L_0}\right) - 1$ **B** $L_1 - L_0$ **C** $\left(\frac{L_1}{L_0}\right) + 1$ **D** $L_1 + L_0$

© UCLES 2025

23 A wire of length L is stretched to determine its limit of proportionality.

The graph shows the variation of the extension x with the force F applied to the wire.

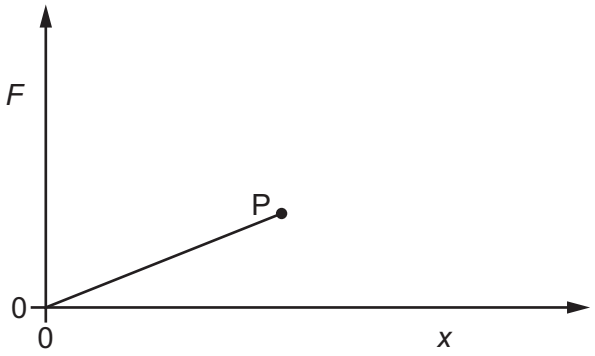

The limit of proportionality is shown by point P on the graph.

The experiment is repeated with another wire of length $2L$ but of the same material and same diameter as the first wire.

Which point on the graph shows the limit of proportionality for the new wire?

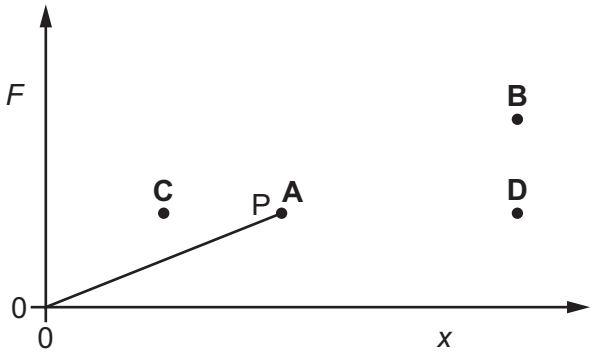

24 The graph shows the variation with distance along the wave of the displacement of water particles at a particular instant in time for a transverse water wave.

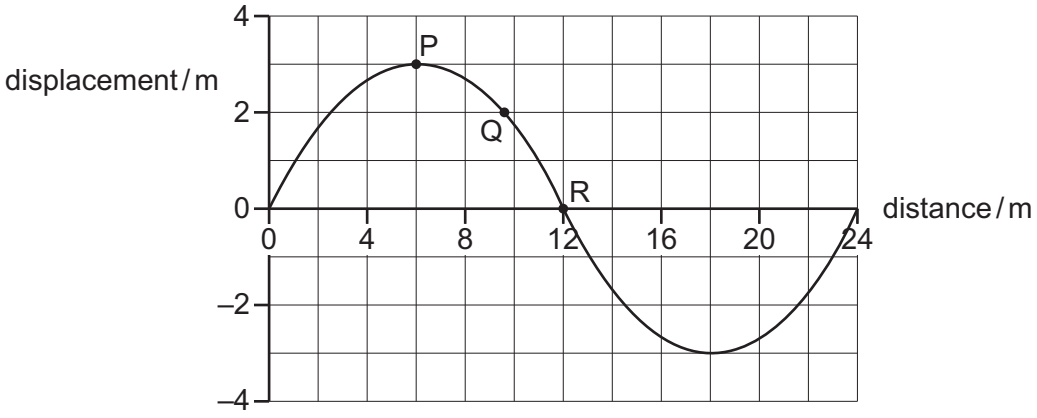

P, Q and R show the positions of three water particles in the wave.

Which particle has the greatest speed at the instant shown?

A all have the same speed

B particle P

C particle Q

D particle R

25 Which phenomenon is only associated with transverse waves?

A diffraction

B interference

C polarisation

D reflection

© UCLES 2025

26 A wave is displayed on an oscilloscope.

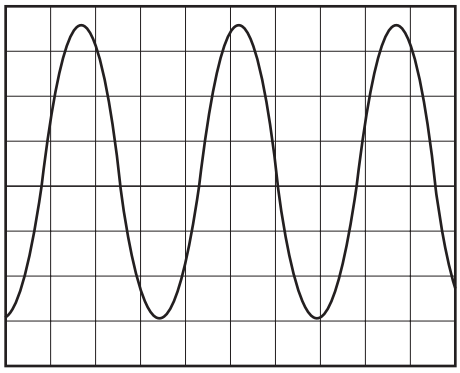

The oscilloscope settings are:

time–base: 300 μs div^{-1}

y-gain: 40 μV div^{-1}.

What is the frequency of the wave?

A 130 Hz **B** 950 Hz **C** 1100 Hz **D** 7100 Hz

27 An electromagnetic wave travelling in free space is **not** visible to the human eye.

What is a possible wavelength of the wave?

A 4.5×10^{-10} km

B 6.2×10^{-7} m

C 5.4×10^{-6} cm

D 4.2×10^{-4} mm

© UCLES 2025

28 Electromagnetic waves of equal wavelengths are emitted from two sources, X and Y. The waves are emitted from X and Y with a phase difference of 180°.

A detector moves along a path that is parallel to the line XY and detects a pattern of intensity maxima and minima.

The diagram shows the arrangement of the sources and the path of the detector.

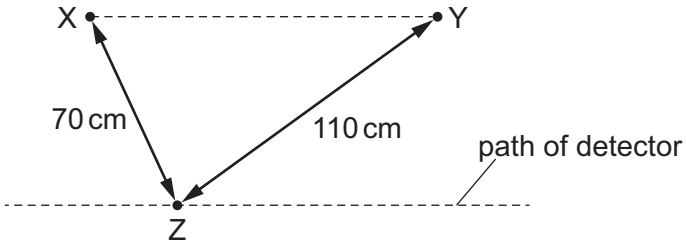

An intensity maximum is detected at point Z. Length XZ is 70 cm and length YZ is 110 cm.

What is a possible wavelength of the waves?

A 10 cm **B** 16 cm **C** 20 cm **D** 40 cm

29 Two waves of the same type overlap.

When does the principle of superposition apply?

A always

B only when the waves have the same amplitude

C only when the waves travel in opposite directions

D only when the waves have the same frequency

© UCLES 2025

30 A ripple tank contains water at a constant depth.

A water wave of constant frequency travels towards a gap in a barrier placed in the ripple tank.

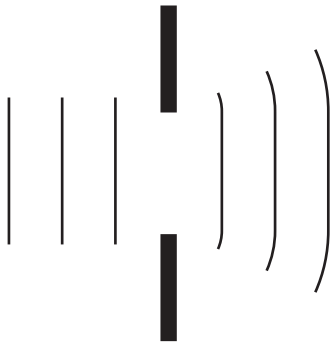

The gap is made smaller.

Which diagram represents the wave before and after the barrier?

A



B

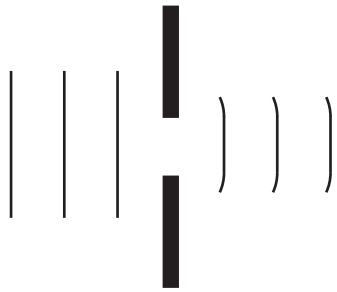

C

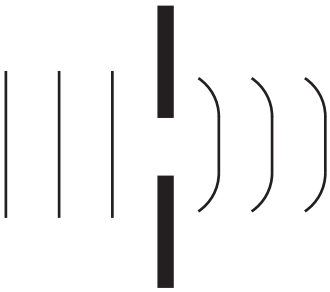

D

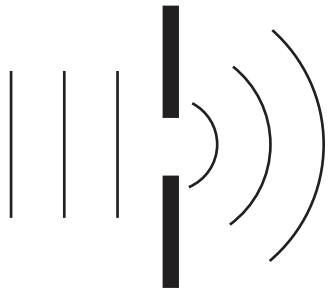

31 Light of a single frequency from two coherent sources interferes to produce a pattern of bright and dark fringes on a screen.

Which change results in a larger fringe separation?

A increasing the distance between the sources and the screen

B increasing the distance between the two sources

C increasing the frequency of the light

D increasing the intensity of the light

32 The current I in a metallic conductor of cross-sectional area A is given by

$$I = Anve$$

where e is the elementary charge and v is the mean drift velocity of the conduction electrons.

What is represented by the letter n in the equation?

A density of conduction electrons

B number of conduction electrons per unit time

C number of conduction electrons per unit volume

D volume of conduction electrons

33 What **cannot** be the charge on a charge carrier?

A $-4.8 \times 10^{-19}\,\text{C}$

B $-3.2 \times 10^{-19}\,\text{C}$

C $-2.4 \times 10^{-19}\,\text{C}$

D $+3.2 \times 10^{-19}\,\text{C}$

34 A steel wire with a length of 2.20 m is connected to a battery as shown.

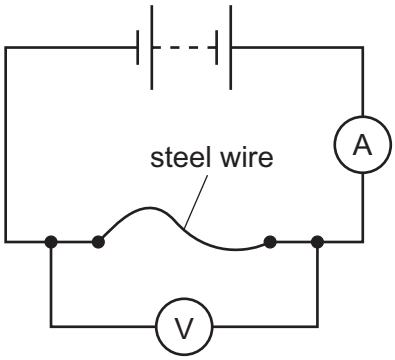

The reading on the voltmeter is 1.50 V and the reading on the ammeter is 4.90 A.

The resistivity of steel is $6.90 \times 10^{-7}\,\Omega\,\text{m}$.

What is the diameter of the steel wire?

A $1.76 \times 10^{-4}\,\text{m}$ **B** $3.52 \times 10^{-4}\,\text{m}$ **C** $1.26 \times 10^{-3}\,\text{m}$ **D** $2.51 \times 10^{-3}\,\text{m}$

© UCLES 2025

35 Two resistors of resistance R and two resistors of resistance $3R$ are connected to a cell of e.m.f. 8.0 V as shown.

The cell has negligible internal resistance.

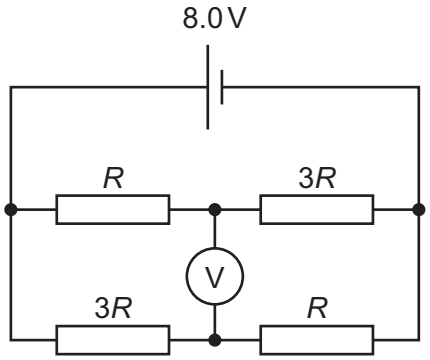

What is the reading on the voltmeter?

A 0.0 V **B** 2.0 V **C** 4.0 V **D** 6.0 V

36 A battery has an e.m.f. E and internal resistance r. The battery delivers a current I to a variable resistor and the p.d. across its terminals is V.

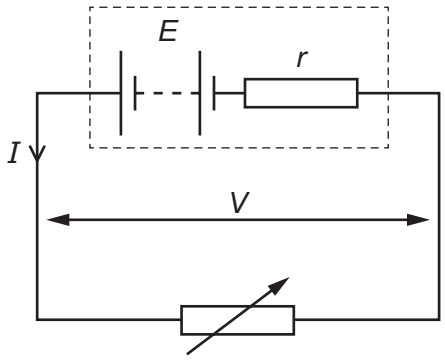

The variable resistor is adjusted so that I increases.

Why does V decrease?

A The e.m.f. E decreases.

B The internal resistance r increases.

C The p.d. across r increases.

D The resistance of the variable resistor increases.

37 An electrical device of fixed resistance 20 Ω is connected in series with a variable resistor and a battery of e.m.f. 16 V and negligible internal resistance.

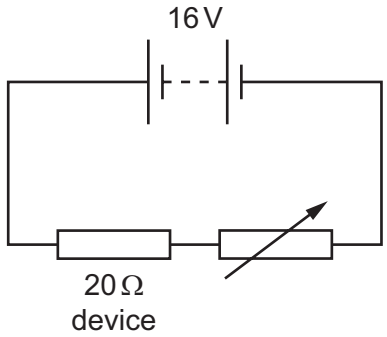

The power dissipated in the electrical device is 4.0 W.

What is the resistance of the variable resistor?

A 16 Ω **B** 36 Ω **C** 44 Ω **D** 64 Ω

38 A nucleus decays by emitting a β^+ particle.

Which particle **must** also be emitted from the nucleus?

A antineutrino

B β^- particle

C α-particle

D neutrino

39 What are the charges on an antidown quark and on an antistrange quark?

	antidown quark	antistrange quark
A	$+\frac{1}{3}e$	$+\frac{1}{3}e$
B	$+\frac{1}{3}e$	$-\frac{1}{3}e$
C	$-\frac{1}{3}e$	$+\frac{1}{3}e$
D	$-\frac{1}{3}e$	$-\frac{1}{3}e$

© UCLES 2025

40 The nucleus of a radioactive isotope of an element emits an α-particle. The daughter nucleus then emits a β^- particle and then the daughter nucleus of that reaction emits another β^- particle.

Which statement describes the final nuclide that is formed?

A It is a different isotope of the original element.

B It is a nuclide of a different element of higher proton number.

C It is a nuclide of the same element but with different proton number.

D It is identical to the original nuclide.

© UCLES 2025

BLANK PAGE

Permission to reproduce items where third-party owned material protected by copyright is included has been sought and cleared where possible. Every reasonable effort has been made by the publisher (UCLES) to trace copyright holders, but if any items requiring clearance have unwittingly been included, the publisher will be pleased to make amends at the earliest possible opportunity.

To avoid the issue of disclosure of answer-related information to candidates, all copyright acknowledgements are reproduced online in the Cambridge Assessment International Education Copyright Acknowledgements Booklet. This is produced for each series of examinations and is freely available to download at www.cambridgeinternational.org after the live examination series.

Cambridge Assessment International Education is part of Cambridge Assessment. Cambridge Assessment is the brand name of the University of Cambridge Local Examinations Syndicate (UCLES), which is a department of the University of Cambridge.

© UCLES 2025